Product Dimensions (mm)

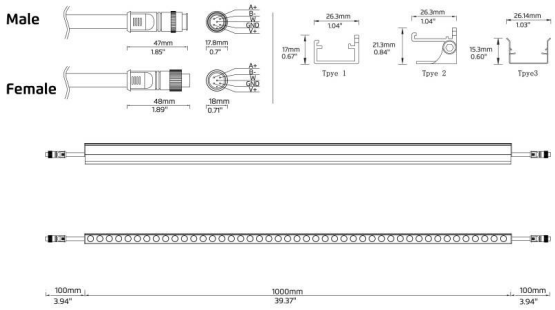

Installation Method 1

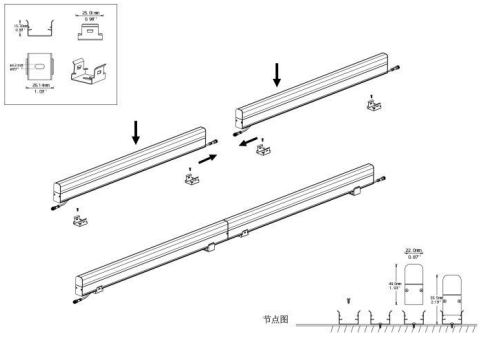

Installation Accessories

Signal Adapter

T Connector

Installation Method 2

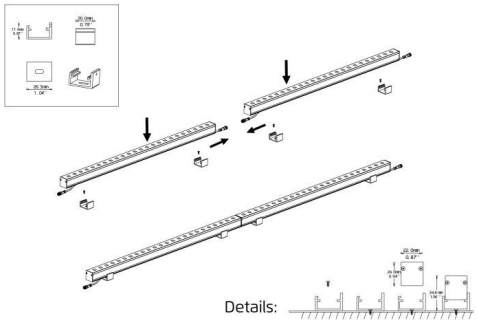

Installation Method 3

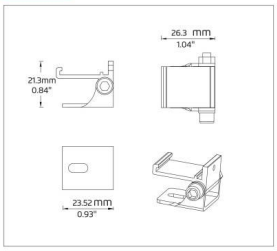

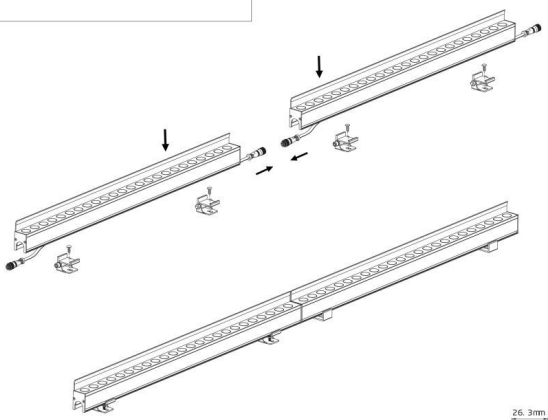

Details:

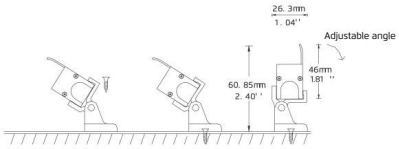
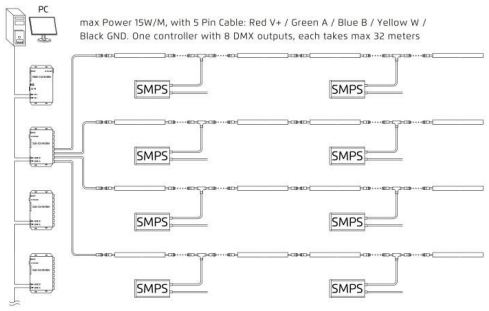
Control System Diagram